FOODSERVICE DISPOSER
Installation Manual



SS-100 | SS-200 | SS-300 | SS-500 | SS-1000

⚠WARNING WARNING indicates a hazardous situation which, if not avoided, could result in death or serious injury.

⚠CAUTION CAUTION indicates a hazardous situation which, if not avoided, could result in minor or moderate injury.

NOTICE NOTICE is used to address practices related to physical injury

Please be certain that the person who installs or uses this appliance carefully reads and understands the Safety Instructions contained in this manual.

Call: 1-800-845-8345

Text: 262-233-2231 (message and data rates may apply)

Chat us by visiting www.insinkerator.com/foodservice

Part No. 13954 Rev. D

Table of Contents

Introduction
- Introduction 4
- Clean the Drain Line 4
- Typical Installation 4
- Required Tools/Materials 4
- Instructions Pertaining to Risk of Fire, Electrical Shock, or Injury to Persons..... 6

Installing the Disposer
- Disposer Mounting 7

Standard InSinkErator Mountings
- Sink Bowl Mounting Assemblies 8

Special InSinkErator Mountings 9

Plumbing Connections
- Drain Line Connections 10
- Water Supply Connections 10

MS Control Center Wiring Diagrams 12

MRS Control Center Wiring Diagrams 13

CC-101 Control Center Wiring Diagrams 14

CC-202 Control Center Wiring Diagrams 15

AS-101 Control Center Wiring Diagrams 16

Electrical Connections
- Electrical Connections 18

Operating Instructions
- Operating the Disposer 19

Installation Troubleshooting 20

Operation Troubleshooting 23

Warranty 24

Scan QR code to view installation video.

INTRODUCTION

InSinkErator Foodservice food waste disposers are UL® and cUL® Listed.

Important – These installation instructions are for the benefit of the installing contractor. InSinkErator and/or InSinkErator Factory Authorized Service Centers do not make original installations. For technical information not covered in these instructions, contact the supplier, or InSinkErator Service at 1-800-845-8345.

CLEAN THE DRAIN LINE

With a drain line auger, clear away all hardened waste material in the horizontal drain pipe running from the drain trap to the main waste line.

TYPICAL INSTALLATION

See figures 1 and/or 9. For AUS/NZ see figures 1A and/or 9A. A typical foodservice disposer installation incorporates the following connections:

- Water shut-off valve: It is recommended that a shut-off valve be positioned on the inlet side of the plumbing, so water passes through the shut-off before reaching the solenoid
- Flow control valve: Controls the amount of water being used with the disposer
- Solenoid valve: Ensures water is in the grind chamber when the disposer is running
- Syphon breaker: Prevents backflow of water into the water line
- Manual start/stop switch or multi functional control center, and control center mounting bracket
- Sink or trough

REQUIRED TOOLS/MATERIALS

The following items are needed to install the disposer:

- Screwdriver
- 1-5/16" minimum adjustable wrench
- Pipe wrench
- Wire nuts
- 7/16" nut driver
- Disposer Legs (SS-100 legs sold separately)

The following items may be needed to install the disposer:

- Plumbing putty
- Hacksaw
- Drain auger
- 1/2" NPT flexible connection or coupling
- 3/8" square drive
- Teflon tape or pipe thread sealant
- Liquid-tight conduit and fittings (4 minimum)
- 12 gauge wires
- Mounting adapter, see pages 8 and 9

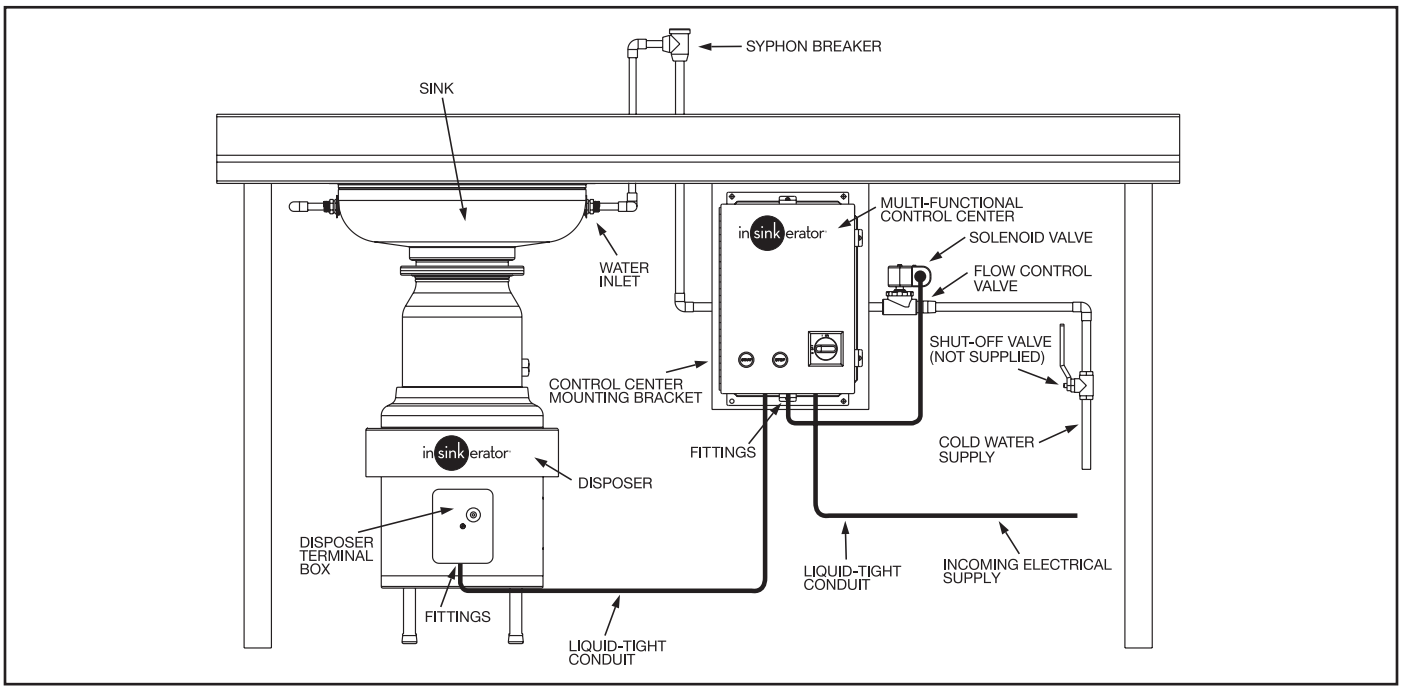

Figure 1. Typical Installation (not acceptable for AUS/NZ)

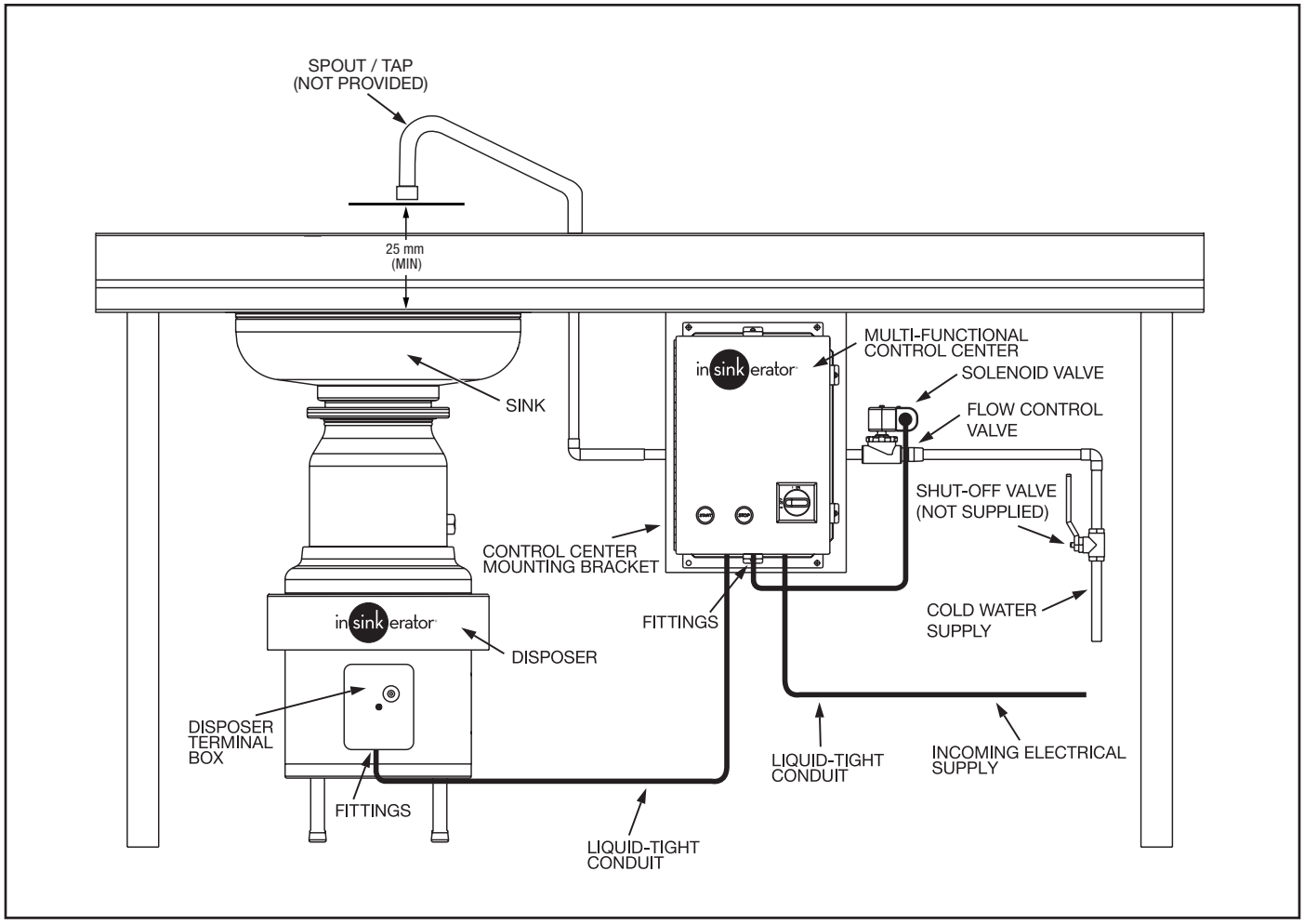

Figure 1A. Typical Installation AUS/NZ

NOTE: FOR AUS/NZ INSTALLATIONS

The installation of this product is required to be in accordance with AS/NZS 3500.2. All plumbing and electrical work must be completed by a qualified tradesperson. Make sure that the installation of this appliance is allowed by the authorities.

INSTRUCTIONS PERTAINING TO RISK OF FIRE, ELECTRIC SHOCK, OR INJURY TO PERSONS

IMPORTANT SAFETY INSTRUCTIONS

⚠ WARNING

PERSONAL INJURY/PROPERTY DAMAGE

If the electrical installer is not experienced in electrical installation, we recommend seeking competent professional assistance. Disposer or accessory damage due to improper installation is not covered under warranty. All installations must comply with local electrical codes.

⚠ WARNING

PERSONAL INJURY

- Food waste disposers are designed to grind and dispose of normal food waste. Inserting materials or items other than food waste into the disposer could cause personal injury and/or disposer damage.
- To reduce the risk of injury from materials that may be expelled from the disposer grind chamber, ensure that the disposer baffle is properly installed.
- To prevent the ejection of food waste and to keep foreign materials out of the grind chamber, replace the splash baffle when it becomes worn.
- Do not put any of the following items into the disposer: clam or oyster shells, drain cleaner, glass, china, plastic wrap, large bones, metal objects, explosive materials, extremely hot water, grease, oil, or syrup.
- Turn the power off before attempting to clear a jam, remove an object, or press the reset button.
- Do not insert your fingers into the disposer. Use long-handled tongs or pliers to remove objects from the disposer.
- Loosen any jams with the dejamming bar.
- Be certain that all persons who will operate the disposer read the safety and operating instructions prior to operating the disposer.
- To prevent accidents, ensure that the disposer is turned off before you leave the area.

⚠ WARNING

FIRE HAZARD

To minimize the possibility of fire, do not store flammable items near the disposer. Do not use or store gasoline or other flammable liquids near the disposer.

NOTICE

PROPERTY DAMAGE

- Disposers shipped from factory are not wired for a specific voltage. Refer to the motor connection wiring diagram in the terminal box for voltage instructions.
- Ensure the disposer motor voltage and phase match that of the electrical supply.
- The disposer motor wiring connection is shown in the disposer terminal box.

GROUNDING INSTRUCTIONS

⚠ WARNING

ELECTRICAL SHOCK

- All control centers and disposers must be grounded.
- A properly fused disposer control (with a marked “off” position) that disconnects all ungrounded supply conductors must be installed at the electrical supply source.
- Turn off the electrical supply to the disposer before installing/servicing. Test the circuit with a voltmeter or circuit tester to ensure the power is off.
- Installation must confrom to all local electrical codes.
- Be careful not to pinch or damage the electrical wires when installing the terminal box.
- Do not reconnect electrical current at main service panel until proper grounds are installed.

⚠ WARNING

ELECTRICAL SHOCK

- Disconnect the electrical supply before servicing the disposer.
- Ensure the disposer and controls are properly grounded.

SAVE THESE INSTRUCTIONS

Installing the Disposer

⚠ WARNING

PERSONAL INJURY

- For safe operation, install the disposer in compliance with the minimum distance illustrated in Figure 2.
- Disposer must be properly installed to prevent serious injury from moving shredder part.

NOTICE

PROPERTY DAMAGE

To avoid excess vibration, InSinkErator recommends a minimum countertop thickness of 16 gage stainless steel.

DISPOSER MOUNTING

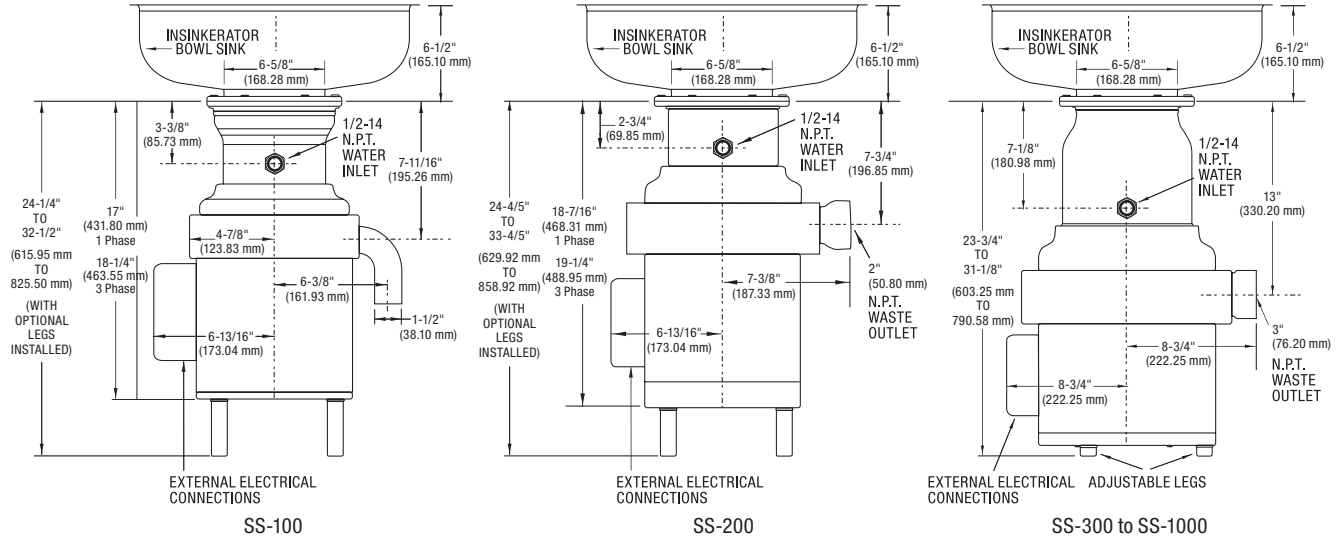

NOTE: Minimum 1" (25.4 mm) clearance required between bottom of disposer and floor for all 3 models.

Figure 2. Distance from Table Top to Mounting Flange

Removing an Existing Disposer (if applicable)

⚠ DANGER



ELECTRIC SHOCK!

Turn off water and electrical supply. Discharge capacitor with 1000 ohm jumper wire (1 Phase only). Do not use a screwdriver to discharge or capacitor may be damaged.

REMOVING DISPOSER

1. Turn off electrical supply and water supply to disposer.
2. Disconnect cold water connection from disposer body water inlet (if connected).
3. Disconnect waste line from disposer.
4. Remove terminal box retaining screw and terminal box cover. Mark motor lead wires and electrical supply wires, then disconnect wires and grounding wire from disposer.

NOTE: Make sure sink can bear weight of disposer before legs are loosened. In some cases, support disposer before loosening or removing legs

5. If equipped with legs and legs interfere with removing dis-poser from mounting flange, pull O-ring down disposer leg, turn each leg clockwise to raise legs and gain floor clearance.
6. Remove disposer from mounting flange by turning disposer or loosening bolts as necessary (depending on mounting flange).
7. To remove legs, remove black cap plug from bottom of support leg. Insert slotted screwdriver into open end of leg support tube and turn stud counterclockwise until free of upper end bell. Pull leg from disposer

Installing Disposer to Standard InSinkErator Mountings

For replacement installations, first check whether the existing mounting is an InSinkErator® mounting assembly (see dimensions in Figure 3).

- If the existing disposer is an InSinkErator model, the new InSinkErator disposer will be compatible with the current mounting.
- If the existing disposer is a different brand, use the Mounting Adapter Selection Guide to determine and order the appropriate adapter for installation.

1. Place the mounting flange (1) over the existing collar adaptor connection lip or sink bowl flange (this may require some force).
2. Push the mounting flange up out of the way and fit the groove in the mounting gasket (2) onto the connection lip. Make sure the gasket is fully seated on the flange.
3. Push the mounting flange down over the mounting gasket, fitting the threaded mounting flange fasteners into the recesses in the top of the mounting gasket.

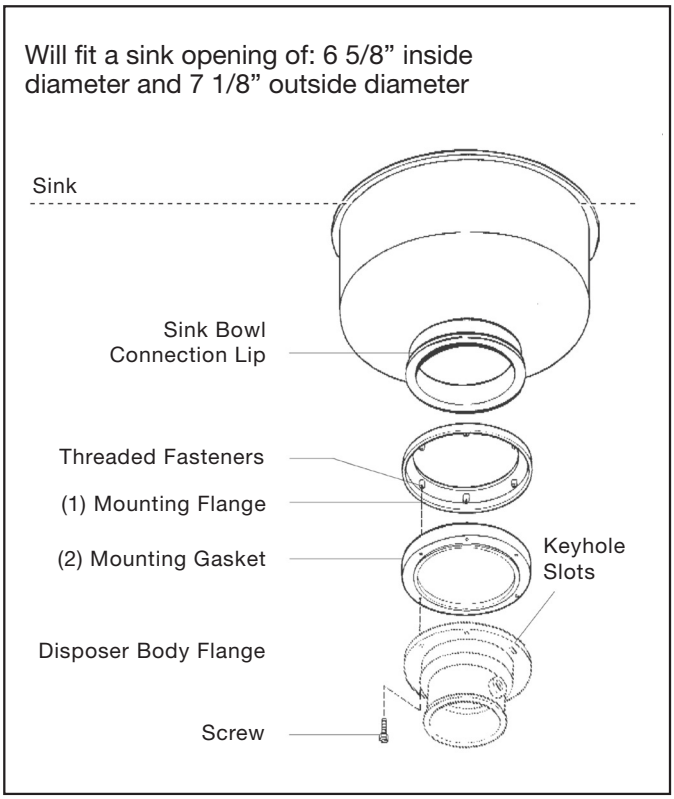

Figure 3. 6 5/8" Mounting Gasket 11559E

4. From the bottom, insert two screws through opposite sides of the flat gasket (3) and mounting flange, into the threaded fasteners in the existing flange. The flat gasket is used only in the #6 mounting assembly. The screws should protrude about 1/4 inch below the mounting gasket.
5. Position the disposer beneath the mounting gasket and raise it to engage the two protruding screws in the disposer body flange keyhole slots. Secure the remaining screws and position the disposer correctly for the plumbing connections. For SS200-SS1000 disposers, adjust the legs to support the disposer.

NOTE:
Install the supplied legs on all replacement disposers SS200, SS300, SS500, and SS1000. For the SS100, legs are sold separately and should be installed as needed or if the product has an adapter installed.

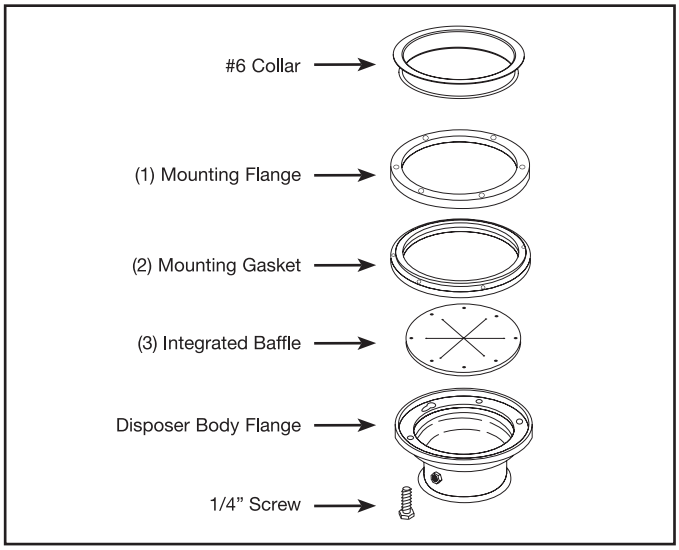

Figure 4. #6 Mounting Assembly with Integrated Baffle

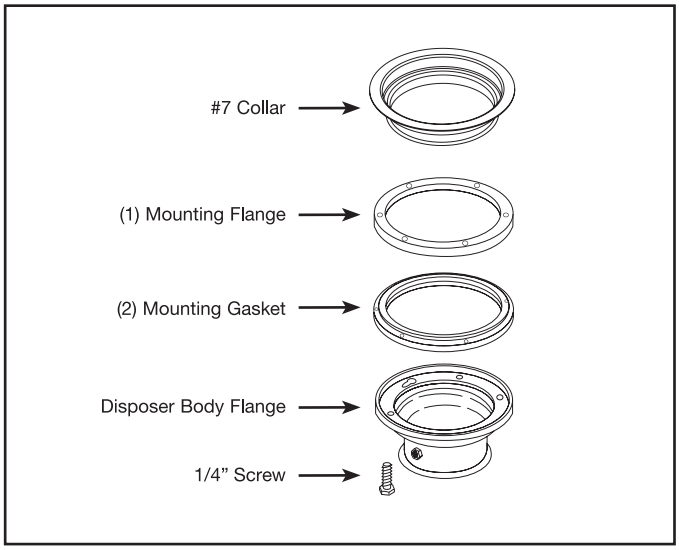

Figure 5. #7 or Sink Bowl Mounting Assembly with removable baffle

Scan QR code to see all Mounting & Adapter Installation Sheets.

Special InSinkErator Mountings

When installing an InSinkErator Foodservice disposer to any other mounting configurations, a special mounting adaptor kit is required. The special mountings are described in the Mounting Adaptor Selection Guide (for more information, call 1-800-845-8345, or go to www.insinkerator.com). Figures 6-8 show examples of non-InSinkErator sinks. (Mounting instructions are included in each special mounting adaptor kit.)

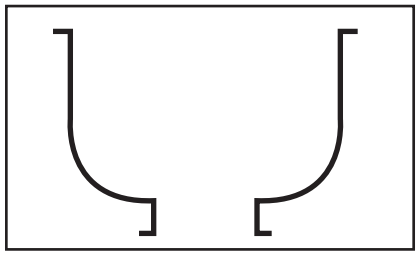

Figure 6. Outward Flange

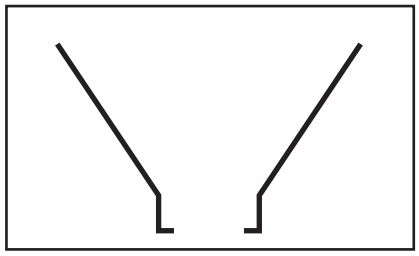

Figure 7. Inward Flange

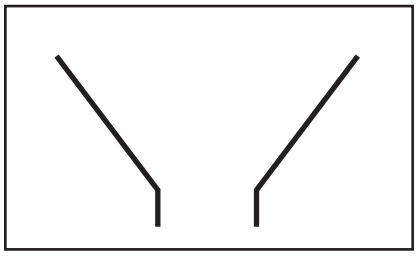

Figure 8. Straight Flange

NOTICE

PROPERTY DAMAGE

These plumbing instructions were written for an experienced competent installer. If the installer is not experienced in plumbing installation, InSinkErator recommends that competent professional assistance is sought. Damage to the disposer or accessories as a result of improper installation is not covered under warranty. All installations must comply with local plumbing codes.

DRAIN LINE CONNECTIONS

To allow easy access to the disposer overload reset button, the disposer should be facing forward with the disposer terminal box and red reset button facing the operator.

When connecting the drain line, place the “P-trap” as close to the disposer outlet flange as possible.

All horizontal runs should be as short as possible, with a minimum fall of 1/4 inch per foot or 20mm/m.

WATER SUPPLY CONNECTIONS

When connecting the disposer to the incoming water supply, use as few elbows and tees as possible. Connect to the cold water line only. Whenever possible, connect the water supply to the sink base. If connecting to the disposer, use a flexible line or removable union for easier servicing. Ensure the installation meets local plumbing codes. When connecting to the disposer, hold the water inlet nut in place with a wrench to prevent it from turning. Do not allow the nut to spin, as this can cause leaks. All water line fittings are 1/2" NPT except the sink bowl nozzles (1/2" compression).

Install the flow control valve, water solenoid valve, and the syphon breaker (if applicable) according to the direction of the flow arrows marked on each valve body (see Figure 9 or 9A).

NOTE:
For US applications: A syphon breaker must be installed above the flood plane per local plumbing codes.

For AUS/NZ applications: water must be dispensed at least 25mm above the sink flood plane.

WATER FLOW

- Table 2 provides Recommended Cold Water Flow and Drain Line Diameter.

Disposer	Standard Flow Control GPM (LPM)	Optional Flow Control GPM (LPM)	Drain Line Diameter
SS-100	5 (19)	3 (11)	1-1/2" (38.1 mm)
SS-200	7 (26)	5 (19)	2" NPT (50.8 mm)
SS-300	8 (30)	7 (26)	3" NPT (76.2 mm)
SS-500	8 (30)	7 (26)	3" NPT (76.2 mm)
SS-1000	10 (38)	N/A	3" NPT (76.2 mm)

Table 2. Recommended Cold Water Flow and Drain Line Diameter

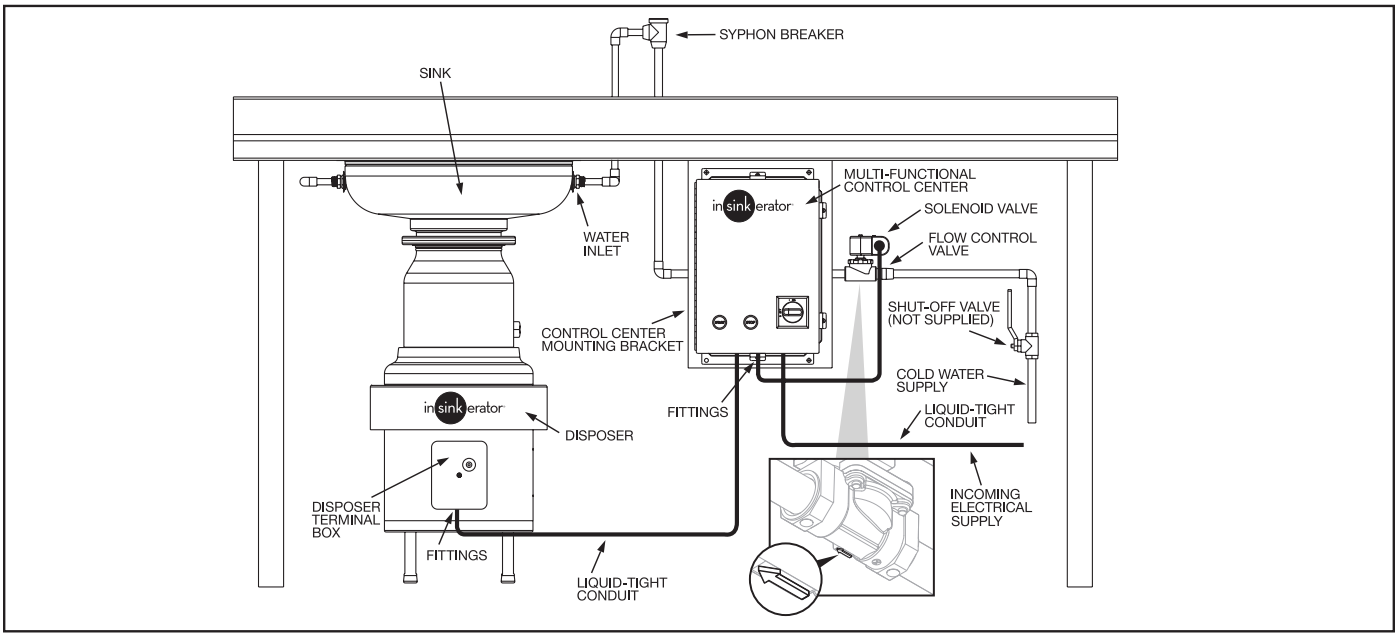

Figure 9. Installation Diagram

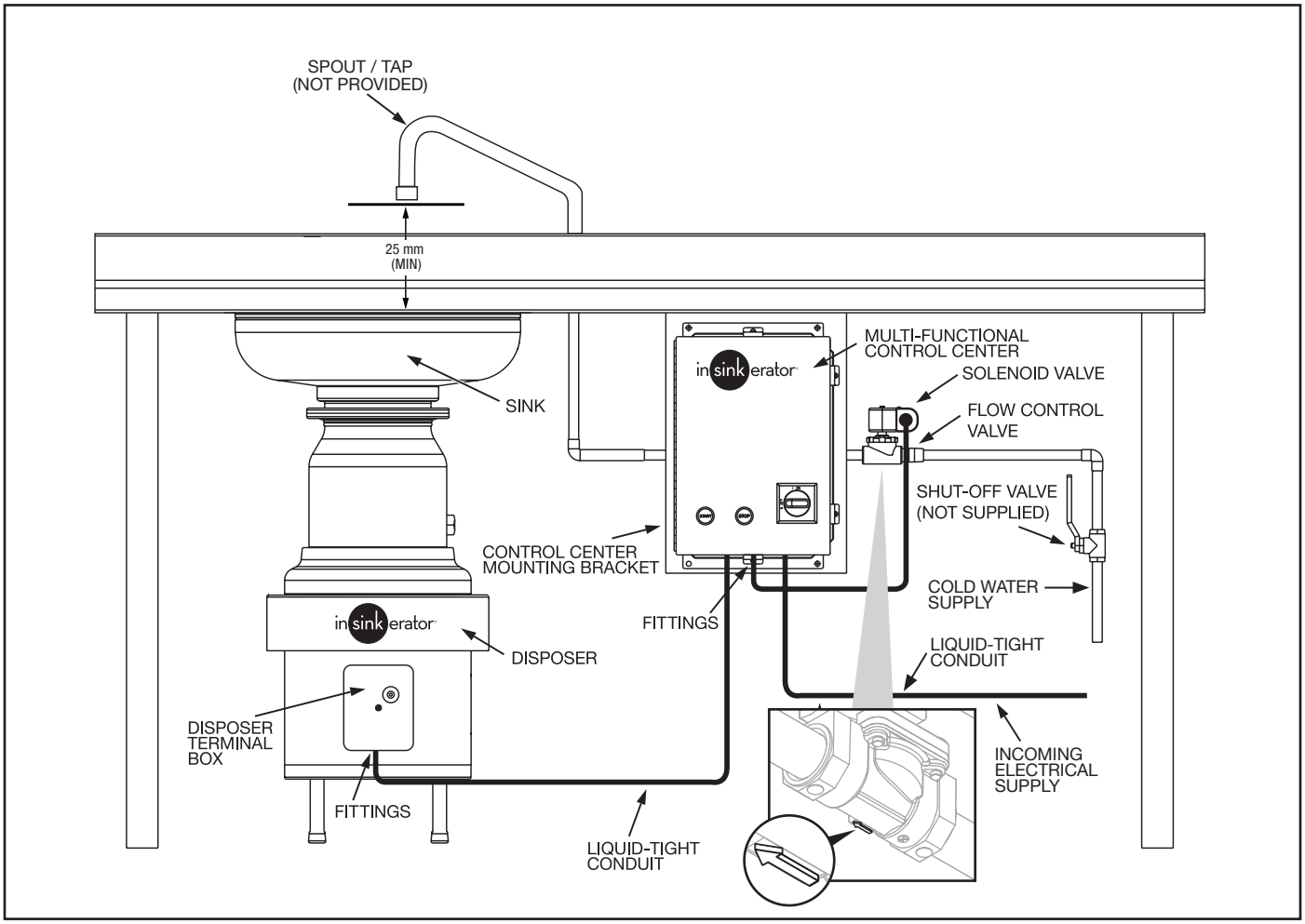

Figure 9A. Installation Diagram AUS/NZ

MS Control Center Wiring Diagrams

NOTE: The diagrams below show standard motor wiring connections for an InSinkErator MS Control Center. For details, please refer to the MS Control Center installation manual.

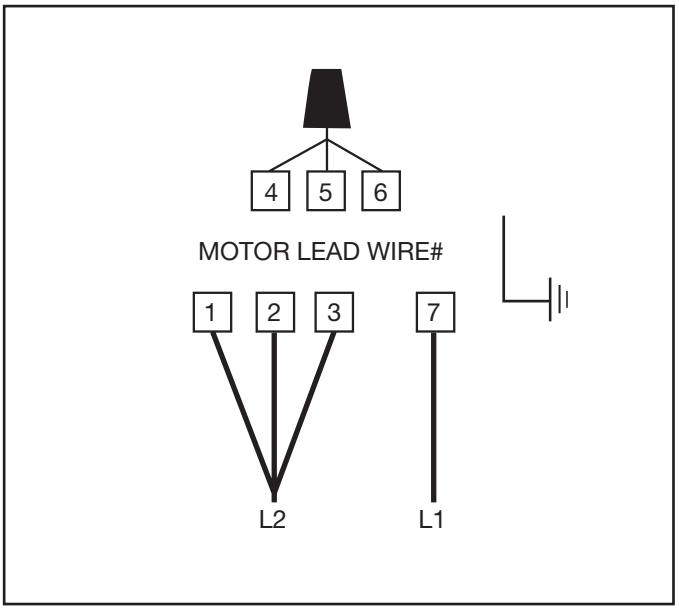

Figure 10. Incoming 115V Single Phase Line Power

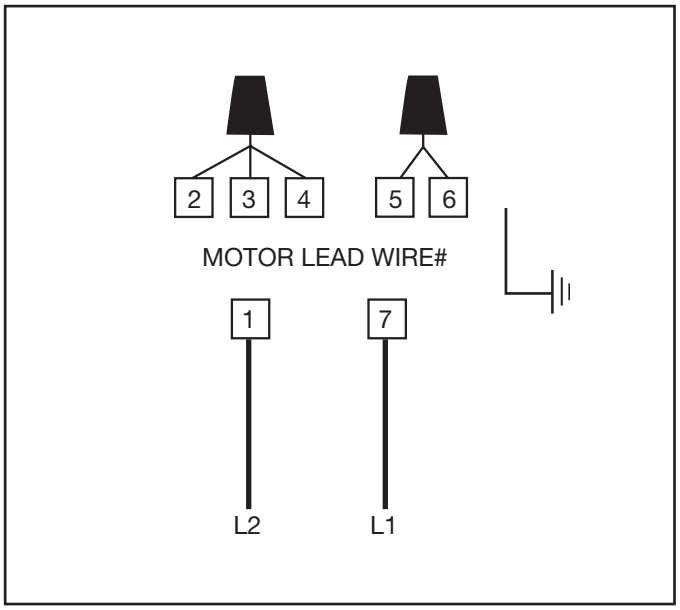

Figure 11. Incoming 208-230V Single Phase Line Power

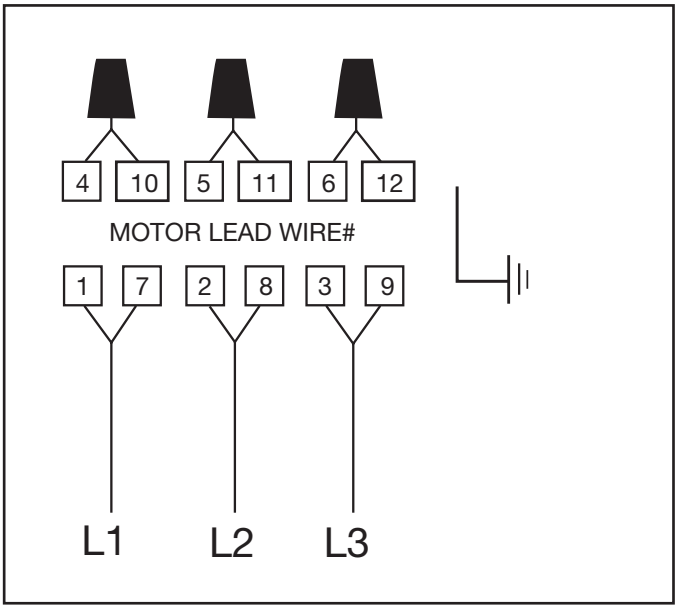

Figure 12. Incoming 208-230V Three Phase Line Power

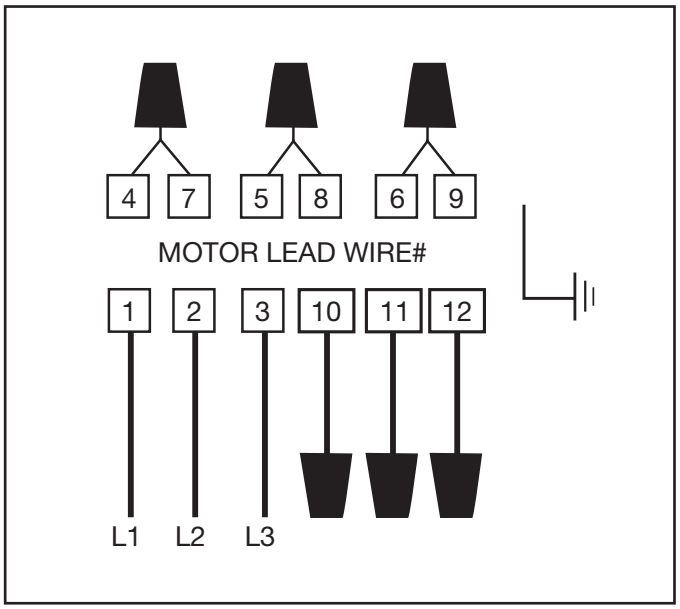

Figure 13. Incoming 460V Three Phase Line Power

Scan QR code to see Electrical Control Center Installation Manuals.

MRS Control Center Wiring Diagrams

NOTE: The diagrams below show standard motor wiring connections for an InSinkErator MRS Control Center. For more details, please refer to the MRS Control Center installation manual.

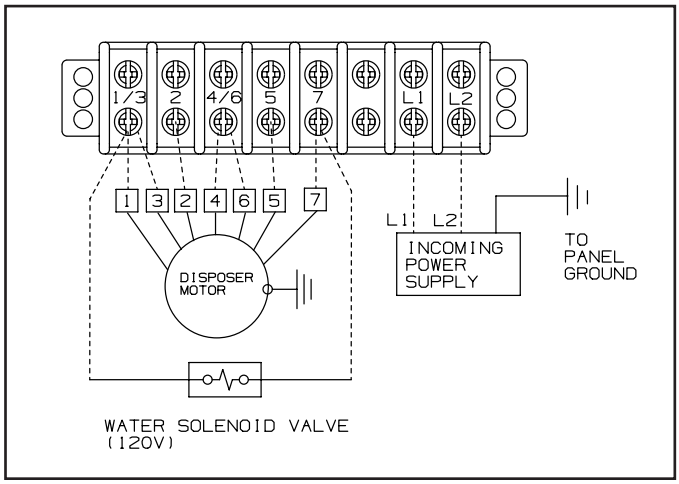

Figure 14. Incoming 115V Single Phase Line Power

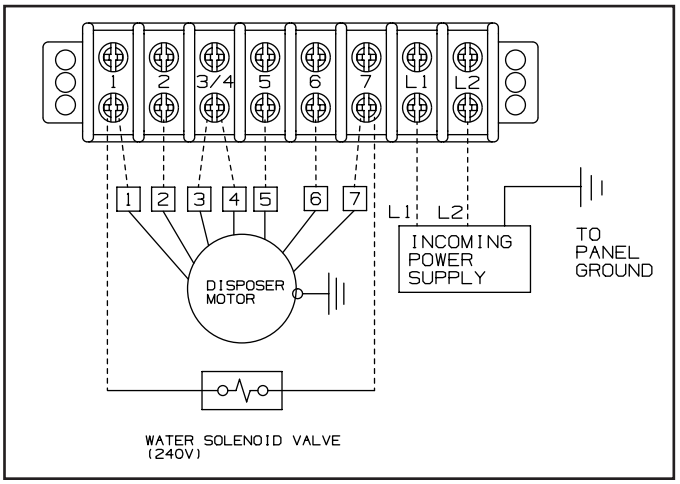

Figure 15. Incoming 208-240V Single Phase Line Power

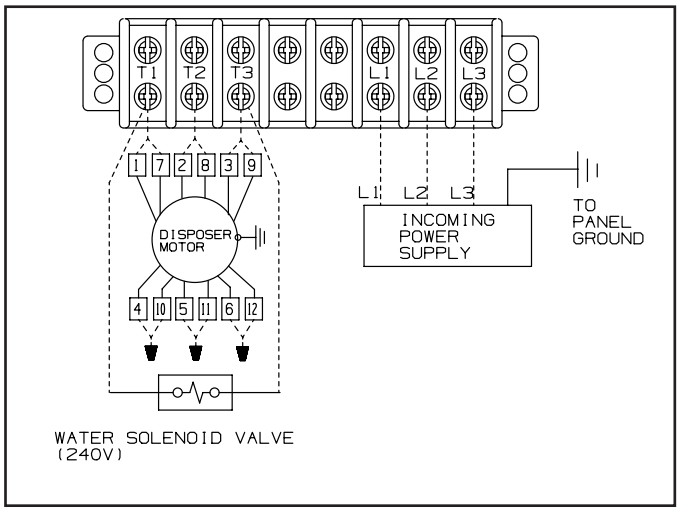

Figure 16. Incoming 208-230V Three Phase Line Power

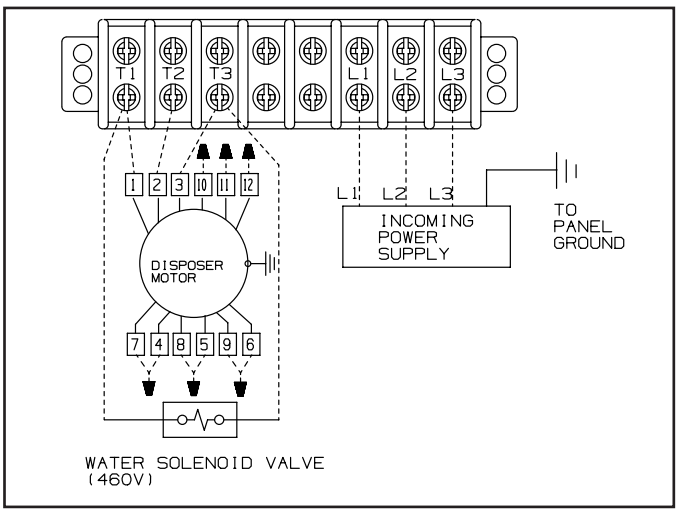

Figure 17. Incoming 460V Three Phase Line Power

Scan QR code to see Electrical Control Center Installation Manuals.

CC-101 Control Center Wiring Diagrams

NOTE: The diagrams below show standard motor wiring connections for an InSinkErator CC-101 Control Center. For more details, please refer to the CC-101 Control Center installation manual.

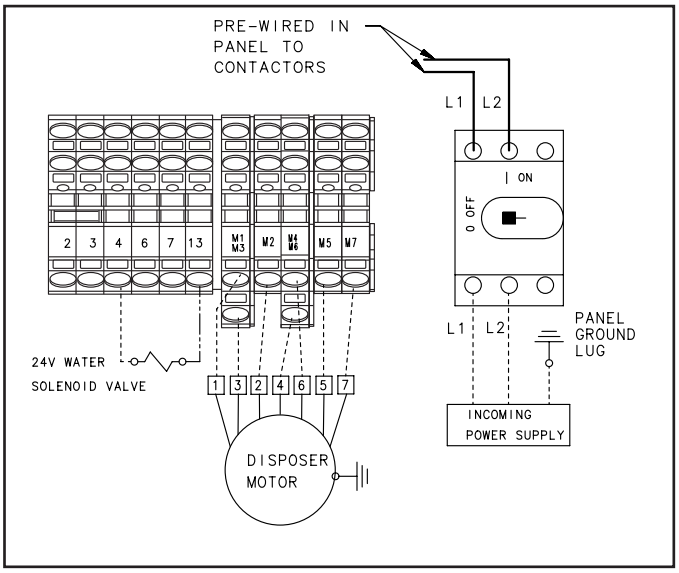

Figure 18. Incoming 115V Single Phase Line Power

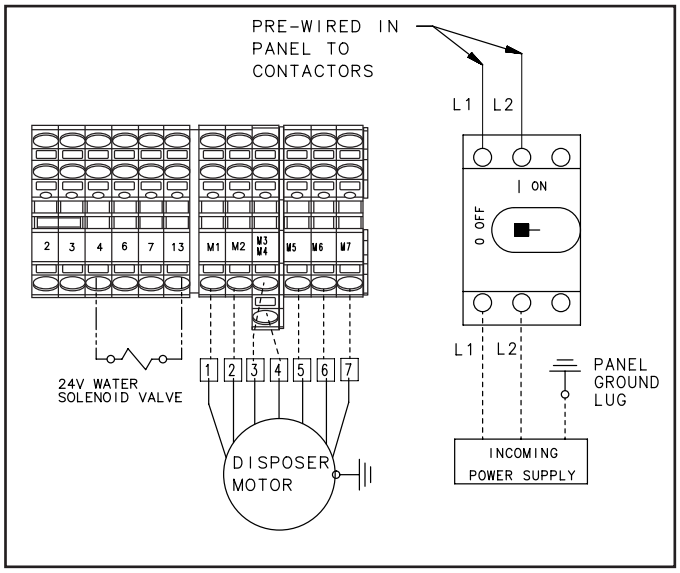

Figure 19. Incoming 208-240V Single Phase Line Power

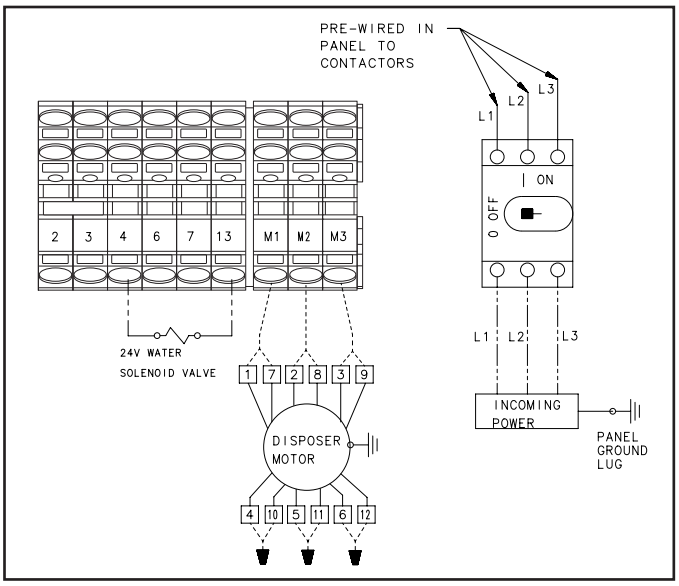

Figure 20. Incoming 208-230V Three Phase Line Power

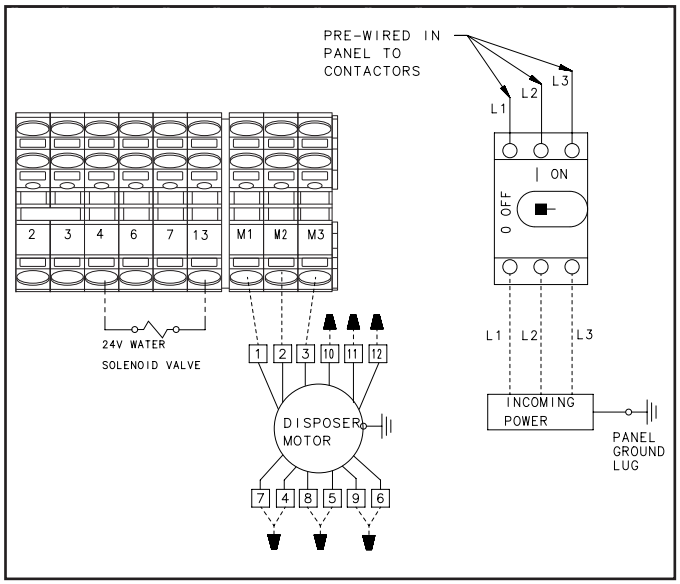

Figure 21. Incoming 460V Three Phase Line Power

Scan QR code to see Electrical Control Center Installation Manuals.

CC-202 Control Center Wiring Diagrams

NOTE: The diagrams below show standard motor wiring connections for an InSinkErator CC-202 Control Center. For more details, please refer to the CC-202 Control Center installation manual.

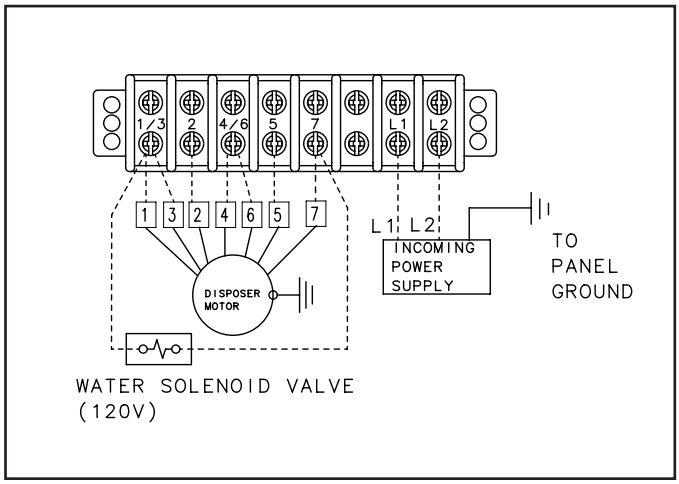

Figure 22. Incoming 115V Single Phase Line Power

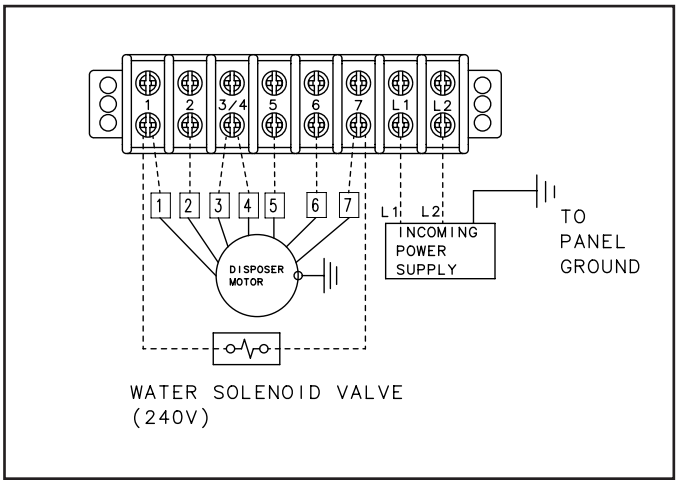

Figure 23. Incoming 208-240V Single Phase Line Power

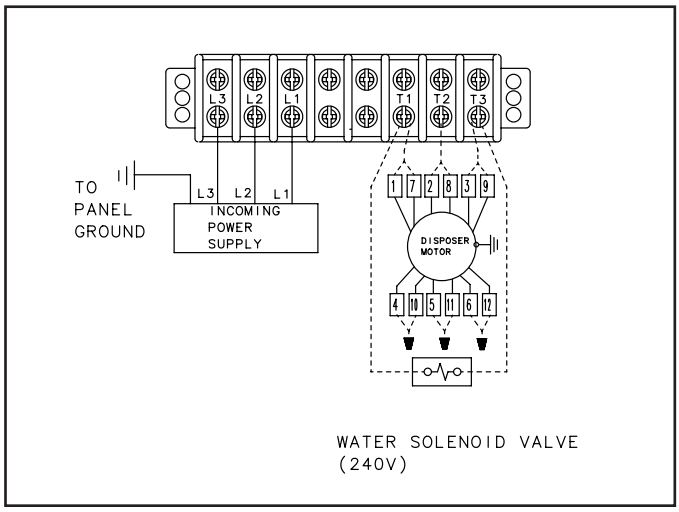

Figure 24. Incoming 208-230V Three Phase Line Power

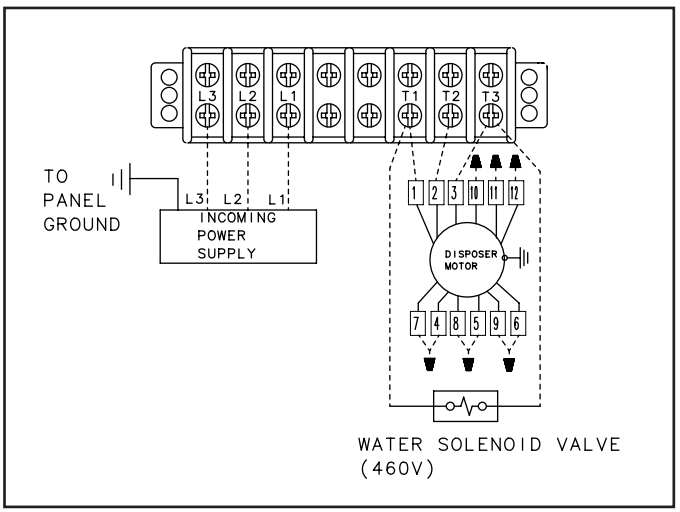

Figure 25. Incoming 460V Three Phase Line Power

Scan QR code to see Electrical Control Center Installation Manuals.

AS-101 Control Center Wiring Diagrams

NOTE: The diagrams below show standard motor wiring connections for an InSinkErator AS-101 Control Center. For more details, please refer to the AS-101 Control Center installation manual.

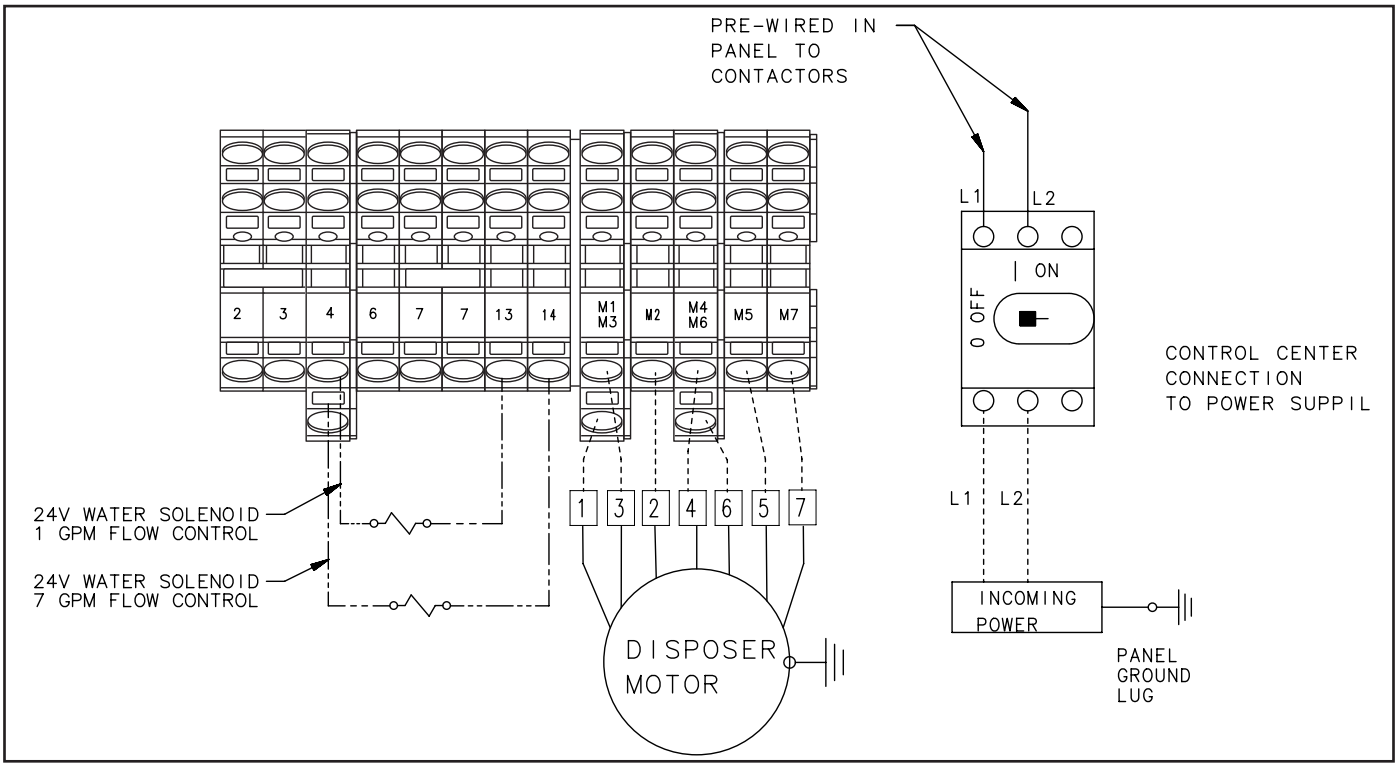

Figure 26. Incoming 115V Single Phase Line Power

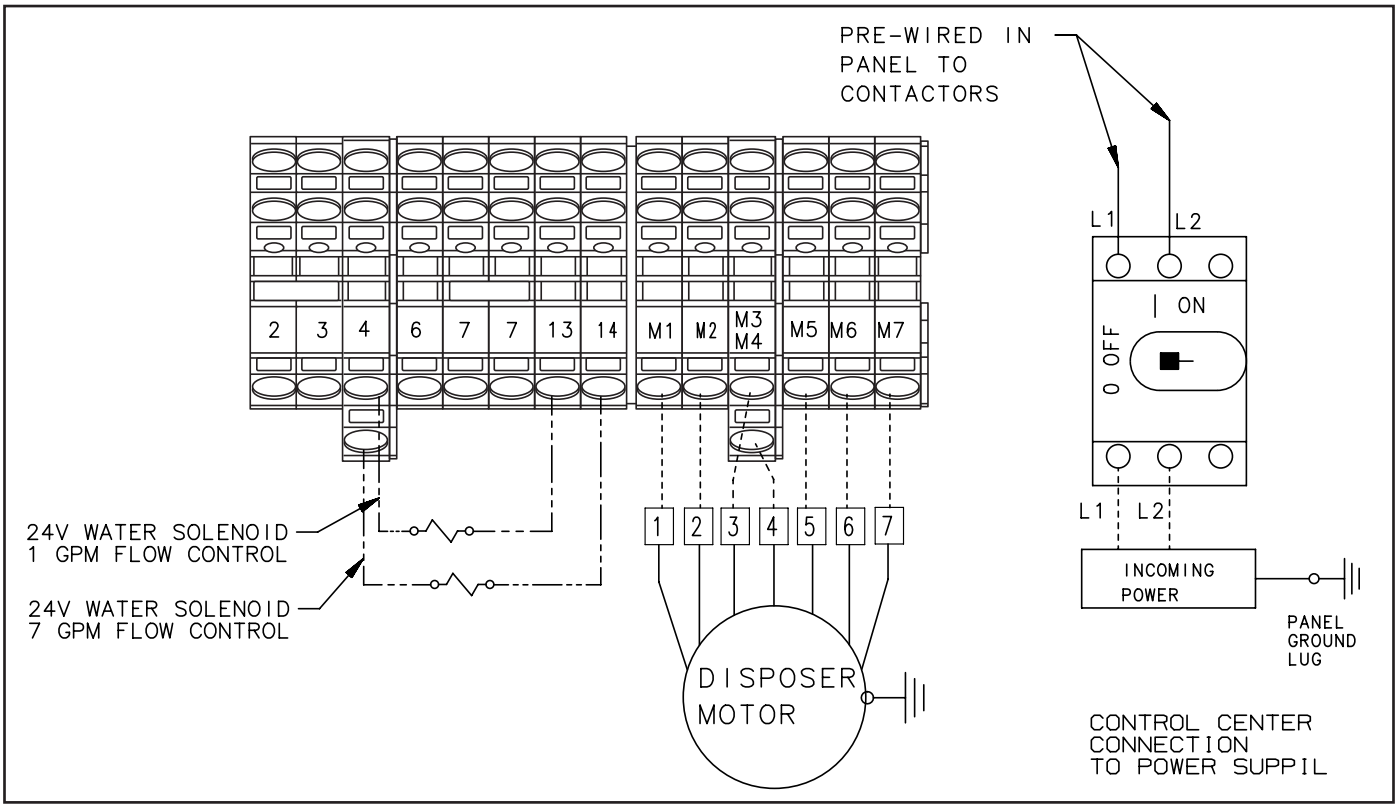

Figure 27. Incoming 208-240V Single Phase Line Power

NOTE: The diagrams below show standard motor wiring connections for an InSinkErator AS-101 Control Center. For more details, please refer to the AS-101 Control Center installation manual.

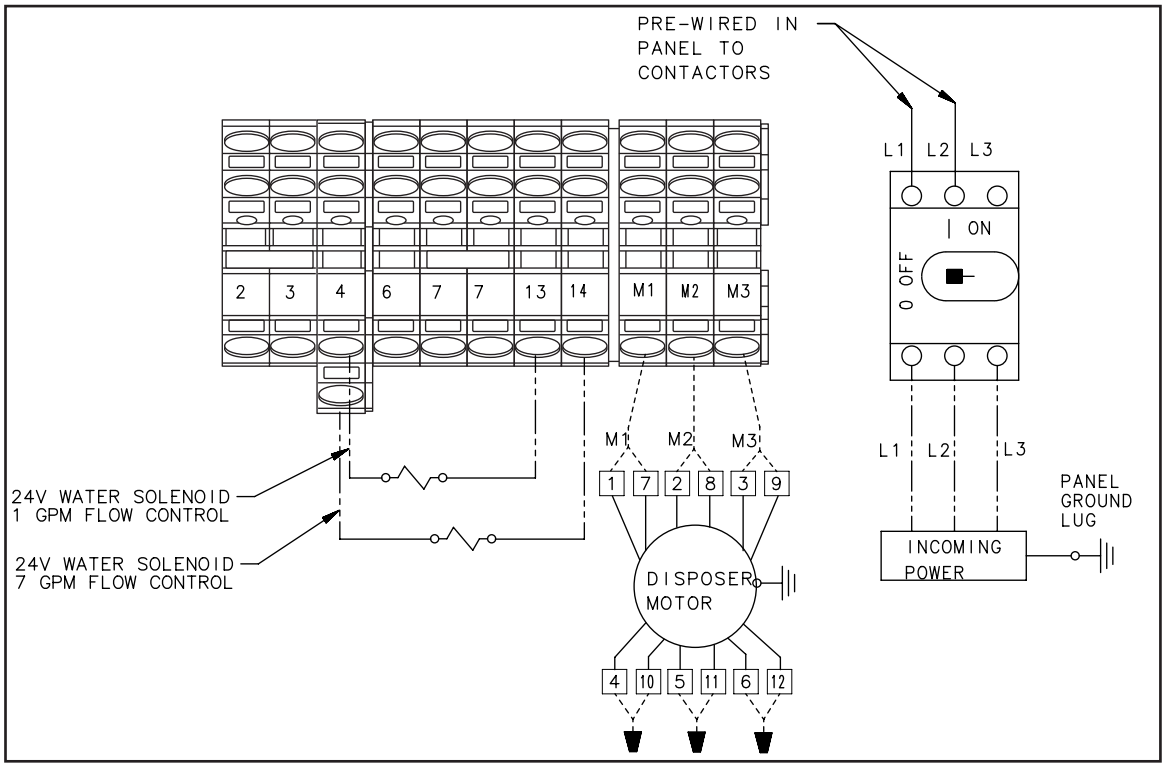

Figure 28. Incoming 208-230V Three Phase Line Power

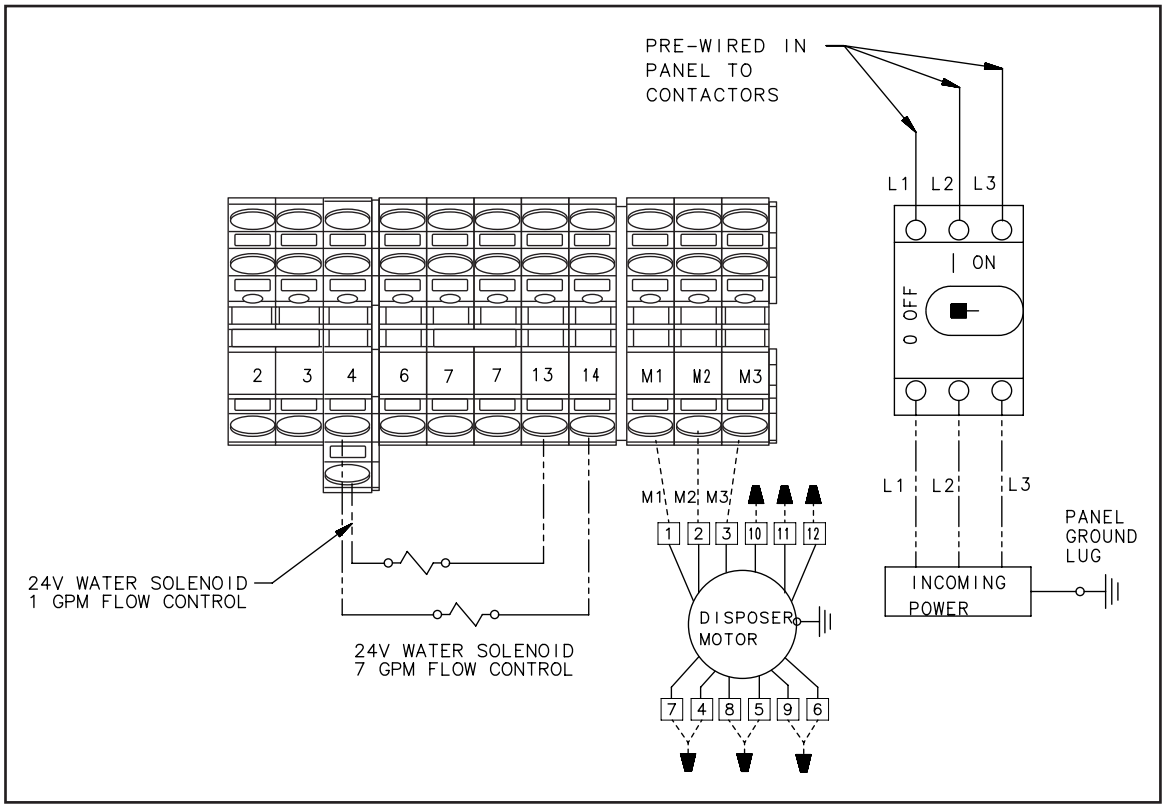

Figure 29. Incoming 460V Three Phase Line Power

⚠ WARNING

ELECTRICAL SHOCK

- Turn off the electrical supply to the disposer before servicing. Test the circuit with a voltmeter or circuit tester to ensure the power is off.
- Installation must conform to all local electrical codes.
- All control centers and disposers must be grounded.
- A properly fused disposer control (with a marked "off" position) that disconnects all ungrounded supply conductors must be installed at the electrical supply source.

⚠ WARNING

PERSONAL INJURY/PROPERTY DAMAGE

If the electrical installer is not experienced in electrical installation, we recommend seeking competent professional assistance. Disposer or accessory damage due to improper installation is not covered under warranty. All installations must comply with local electrical codes.

NOTICE

PROPERTY DAMAGE

- Disposers shipped from the factory are not wired for a specific voltage. Refer to the motor connection wiring diagram in the terminal box for voltage instructions.
- Ensure the disposer motor voltage and phase match that of the electrical supply.
- The disposer motor wiring connection is shown in the disposer terminal box.

ELECTRICAL CONNECTIONS

To connect the disposer to the electricity:

1. Ensure electrical supply to the control center is turned off.
2. Remove the screw in the center of the disposer terminal box.
3. Pull the terminal box out of the stainless steel trim shell.
4. Connect an electrical conduit connector to the hole in the bottom of the exposed wiring compartment.
5. Connect the ground wire to the ground screw.
6. Connect the incoming wires to the motor leads. Make sure the wiring connections are the same as those on the electrical connection diagrams (see pages 12-17).

⚠ WARNING

ELECTRICAL SHOCK

Be careful not to pinch or damage the electrical wires when installing the terminal box.

7. Reinstall the terminal box cover on the trim shell.
8. Turn power back onto the control center and test the disposer.

OPERATING THE DISPOSER

1. Make sure there are no foreign objects in the disposer grind chamber. Do not pre-load the disposer with food waste prior to starting.
2. If equipped with a removable baffle, ensure the baffle is in place.
3. Push the start button on the control switch. The disposer will run and water will flow into the disposer.
4. Feed food waste into the disposer in a steady, continuous flow.
5. When all food waste is flushed away, push the stop button on the control switch.
6. After initial installation, check for leaks or loose connections, and that water is flowing into the disposer.

NOTE: When operating with the Manual Reversing Switch (MRS), DO NOT restart disposer until the rotating shredder has come to a stop.

GRINDING TIPS

- Ensure that a steady stream of cold water runs into the disposer while it is operating (see Table 2 on page 10 for the recommended cold water flow).
- Do not overload the disposer or turn it off with food waste inside the grind chamber. Run the disposer and water for three minutes after the final load to flush away all food waste.

NOTICE

PROPERTY DAMAGE

Do not pre-load food waste into disposer before turning on. Pre-loading disposer with food waste can cause excessive strain and may loosen disposer mounting components, resulting in disposer separating from sink or trough.

⚠ WARNING

PERSONAL INJURY

- Food waste disposers are designed to grind and dispose of normal food waste. Inserting materials or items other than food waste into the disposer could cause personal injury and/or disposer damage.
- To reduce the risk of injury from materials that may be expelled from the disposer grind chamber, ensure that the disposer baffle is properly installed.
- To prevent the ejection of food waste and to keep foreign materials out of the grind chamber, replace the splash baffle when it becomes worn.
- Do not put any of the following items into the disposer: clam or oyster shells, drain cleaner, glass, china, plastic wrap, large bones, metal objects, explosive materials, extremely hot water, grease, oil, or syrup.
- Turn the power off before attempting to clear a jam, remove an object, or press the reset button.
- Do not insert your fingers into the disposer. Use long-handled tongs or pliers to remove objects from the disposer.
- Loosen any jams with the dejamming bar.
- Be certain that all persons who will operate the disposer read the safety and operating instructions prior to operating the disposer.
- To prevent accidents, ensure that the disposer is turned off before you leave the area.

Installation Troubleshooting

This section addresses issues related to initial setup and commissioning. All disposers and controls are fully tested before leaving the factory. Most initial startup problems stem from installation or wiring errors, which are not covered under the manufacturer's warranty.

Use this section for newly installed equipment or units of unknown operating status. For existing units that previously functioned properly, consult the troubleshooting guide in the Service Manual. Inspect all components upon delivery and report any transit damage directly to the freight carrier.

⚠ DANGER

Disconnect power before troubleshooting or servicing the disposer.

⚠ WARNING

Troubleshooting problems listed in this section should be performed by qualified service personnel. Any troubleshooting performed by untrained personnel could result in electrical shock or damage to the disposer.

The following general operative steps will help to verify necessary items before specific troubleshooting is attempted.The folowing should only be performed by qualified Plumbers or Electricians.

If disposer remains inoperative after following these steps, call 1-800-845-8345 to find the nearest Factory Authorized Service Center near you.

Scan here to view the Food Waste Disposer Service Manual.

If the problem is electrical:

- With an VOM measure the voltage supplied to the controller.
- Make sure the controller electrical specifications match the electric power supplied by the building.
- If the unit is 3 phase make sure you have voltage on all three power legs.
- Make sure the disposer motor lead connections are wired correctly for the corresponding power supply and starting controls. (Found in the Electrical Control Center Installation Guide)
- To determine if the problem is in the control switch or the disposer, you can try to bypass the control and wire directly to the disposer.

WARNING: To bypass all electrical starting and/or electrical controls and run the disposer direct, refer to the proper diagrams. Wiring of the disposer has different wiring connections when directly connecting to the electical versus wired to a control center.

Installation Troubleshooting

PROBLEM	CAUSE	SOLUTION
PLUMBING		
Water leak from water input on upper body.	Water inlet was allowed to turn/spin while connecting piping. This caused the seal to break and cannot be repaired or patched.	Replace water inlet connection. See “Cold Water Flow & Drain Line Diameter” in Service Manual – part number #13395.
Water leaks from grind chamber area.	Water inlet connection loose in body.	Replace water inlet connection. See “Cold Water Flow & Drain Line Diameter” in Service Manual – Part number 13395.
Water leaks from siphon breaker.	Loose plumbing connections.	Tighten plumbing connections.
	Improper installation.	See Installation Guide and reinstall disposer.
Water leaks at mounting or waste discharge.	Improper installation.	See Installation Guide and reinstall disposer.
	Loose mounting screws.	Tighten all mounting screws. Tighten locking ring if #5 mounting assembly is used.
	Pinched or broken mounting gasket.	Replace mounting gasket.
Water runs continuously after disposer is turned off.	Solenoid valve installed backward.	Arrow on solenoid must point downstream.
	Solenoid valve collect debris from install or line.	Clean or replace solenoid valve.
	Diaphragm bleeder hole out of position.	Replace solenoid valve.
	Water pressure too high.	Reduce water pressure.
	Normal operation with time delay relay. (AS101,CC101 controls)	Time delay relay can be set for five seconds to ten minute post flush.
	Defective time delay relay. (AS101,CC101 controls)	Check time delay relay circuitry with volt meter and replace if necessary.
ELECTRICAL		
If the problem is electrical: • With an VOM measure the voltage supplied to the controller. • Make sure the controller electrical specifications match the electric power supplied by the building. • If the unit is 3 phase make sure you have voltage on all three power legs. • Make sure the disposer motor lead connections are wired correctly for the corresponding power supply and starting controls. (Found in the ICU of the control or this document)		
Disposer will not start but water runs.	Verify wiring from controlbox to disposer.	Refer to wiring diagrams in this document and the ICU for the controller installed.
	Overload protector tripped.	Allow 5 minute cooling period and reset overload protector.
	Overload protector burned out; open circuits.	Test and replace overload protector.
	Test stator. See “Stator” in service manual.	In spect for pinched (grounded/shorted) stator lead wires.
Disposer will not start and water does not run.	No power to disposer. Replace switch or repair control center.	Check for blown fuses or tripped circuit breaker.
GFIC Breaker trips immediately when power Is applied.	Defective breaker.	Replace breaker.
	Improper Grounding.	Ensure ground is connected to both controller and disposer motor.
Disposer runs briefly, then trips overload protector.	Centrifugal actuator stuck open or closed, or actuator spring is loose (Single Phase only).	Inspect centrifugal actuator. Replace rotor assembly.

PROBLEM	CAUSE	SOLUTION
ELECTRICAL CONT.		
Disposer runs slow and/or stops when food waste is inserted.	Low voltage power supply connected to high voltage stator connections.	See applicable wiring diagram and reconnect motor leads for corresponding voltage.
Overload protector is tripped or fuse/ circuit breaker blows immediately after starting disposer.	Direct short in stator windings.	Test stator windings and replace stator if open. See “Stator” in Service Manual.
	Incorrect wiring connections.	See applicable wiring diagram in Control or disposer installation manual.
208 3-phase- Disposer hums but not run.	Incorrect wiring connections.	See applicable wiring diagram in Control or disposer installation manual. Caution: If the 6 & 9 wires are reversed when connecting to other wires in the disposer.
OTHER		
Disposer or legs are too high to fit under the table.	The existing sink or prep table is shorter than standard.	Measure the clearance needed and use a hacksaw to trim the bottom of the disposer legs to the required length. Ensure all legs are cut evenly so the unit remains perfectly level and stable during operation.

Operation Troubleshooting

⚠ DANGER

Disconnect power before troubleshooting or servicing the disposer.

⚠ WARNING

Troubleshooting problems listed in this section should be performed by qualified service personnel. Any troubleshooting performed by untrained personnel could result in electrical shock or damage to the disposer.

If disposer remains inoperative after following these steps, call 1-800-845-8345 to find the nearest Factory Authorized Service Center near you.

PROBLEM	POSSIBLE CAUSE	SOLUTION
Disposer will not start and water does not flow.	• No incoming water. • Electrical disconnect switch has been reactivated and 30-second delay has not yet expired.	• Turn on electrical supply. • Wait 30 seconds and try starting again.
Disposer will not start but water flows.	• Disposer overload protector is tripped. • Disposer is jammed.	• Turn control to off position and press red reset button on disposer. • Turn control to off position and complete following steps: 1. Insert dejamming wrench (not supplied) slot down through sink opening. Place slot over raised bars found on top of rotating shredder. 2. Twist dejamming wrench back and forth to free jam. Rotating shredder should revolve freely when jam is released. 3. Remove all foreign materials. 4. Allow disposer to cool for 3-5 minutes after it stops running. Press red reset button to reset overload protector. Never strike reset button with objects. 5. If disposer remains inoperative after following these steps, contact nearest InSinkErator Factory Authorized Service Center (call 1-800-845-8345 to find Service Center nearest you).
Disposer motor stops while grinding, but water continues to flow.	• Disposer is jammed. • Disposer overload protector is tripped.	• See “Disposer is jammed,” above. • Turn control to off position and press red reset button on disposer. If disposer was running, allow unit to cool 3-5 minutes before pressing red reset button. Never strike reset button with objects.
Water flows continuously before controls are turned on.		• Reinstall water solenoid valve with arrow on valve pointing in direction of the water flow.
Overload protector trips frequently.	• Disposer is overloaded with food waste.	• Do not overload disposer with excessive amounts of food waste.

Commercial Foodservice Limited Warranty

InSinkErator® (**"InSinkErator"** or **"Manufacturer"** or **"we"** or **"our"** or **"us"**) warrants to the original purchaser only ("Customer" or "you" or "your"), subject to the exclusions below, that your InSinkErator® (the **"InSinkErator Product"**) will be free from defects in material and workmanship for one year from the date of installation (the **"Warranty Period"**). This limited warranty terminates if the original purchaser transfers the InSinkErator Product to any other person or entity.

What is Covered
This limited warranty includes repair or replacement of your InSinkErator Product, accessories if included in the original InSinkErator Product package, and all replacement parts and labor costs if provided by an authorized InSinkErator service representative.

What is not Covered
This limited warranty does not extend to and expressly excludes:

- Losses or damages or the inability to operate your InSinkErator Product resulting from conditions beyond the Manufacturer's control including, without limitation, accident, alteration, misuse, abuse, neglect, or negligence (other than Manufacturer's).
- Wear and tear expected to occur during the normal course of use, including without limitation, cosmetic rust, scratches, dents or comparable and reasonably expected losses or damages.
- Failure to install, maintain, assemble, or mount the InSinkErator Product in accordance with Manufacturer's instructions or local electrical and plumbing codes, faulty or improper electrical installation, faulty or improper plumbing installation, clogged drain lines, or an improperly sized unit (as specified by InSinkErator).

What we will do to Correct Problems
To file a warranty claim during the Warranty Period, you may call Toll Free 1-800-845-8345 for the nearest InSinkErator Authorized Service Agency or to reach Technical Support, or you may visit our website at www.insinkerator.com.

The following information must be provided as part of your warranty claim: your name, address, phone number, your InSinkErator Product model and serial number. You will be required to submit supporting documentation of the date of installation.

Manufacturer or its authorized service representative will determine, in its sole and absolute discretion, if your InSinkErator Product is covered under this limited warranty. Only an authorized InSinkErator service representative may provide warranty service. InSinkErator is not responsible for warranty claims arising from work performed on your InSinkErator Product by anyone other than an authorized InSinkErator service representative.

If a covered claim is made during the Warranty Period, Manufacturer will, through its authorized service representative, and at Manufacturer's or its authorized service representative's sole discretion, either repair or replace your InSinkErator Product. If your InSinkErator Product is replaced, the warranty on the replacement InSinkErator Product will be limited to the unexpired term remaining in the original Warranty Period. **YOUR SOLE AND EXCLUSIVE REMEDY UNDER THIS LIMITED WARRANTY SHALL BE LIMITED TO REPAIR OR REPLACEMENT OF THE INSINKERATOR PRODUCT.** This limited warranty is valid only in the United States and applies only when the InSinkErator Product is used in the country in which it was purchased. If outside the 50 United States, contact your authorized InSinkErator dealer to determine whether any warranty applies.

No Other Express Warranty Applies
THE LIMITED WARRANTIES PROVIDED ABOVE ARE THE SOLE AND EXCLUSIVE WARRANTIES PROVIDED BY MANUFACTURER TO THE ORIGINAL PURCHASER, AND ARE IN LIEU OF ALL OTHER WARRANTIES, WRITTEN OR ORAL, EXPRESS OR IMPLIED, WHETHER ARISING BY OPERATION OF LAW OR OTHERWISE, INCLUDING, WITHOUT LIMITATION, WARRANTIES OF MERCHANTABILITY OR FITNESS FOR A PARTICULAR PURPOSE, WHETHER OR NOT THE PURPOSE HAS BEEN DISCLOSED AND WHETHER OR NOT THE INSINKERATOR PRODUCT HAS BEEN SPECIFICALLY DESIGNED OR MANUFACTURED FOR YOUR USE OR PURPOSE.

Limitation of Liability
TO THE EXTENT PERMITTED BY LAW, IN NO EVENT SHALL MANUFACTURER OR ITS AUTHORIZED SERVICE REPRESENTATIVES BE LIABLE FOR ANY INCIDENTAL, SPECIAL, INDIRECT, OR CONSEQUENTIAL DAMAGES, INCLUDING ANY ECONOMIC LOSS, WHETHER RESULTING FROM NONPERFORMANCE, USE, MISUSE OR INABILITY TO USE THE INSINKERATOR PRODUCT OR THE MANUFACTURER'S OR ITS AUTHORIZED SERVICE REPRESENTATIVE'S NEGLIGENCE. MANUFACTURER SHALL NOT BE LIABLE FOR DAMAGES CAUSED BY DELAY IN PERFORMANCE AND IN NO EVENT, REGARDLESS OF THE FORM OF THE CLAIM OR CAUSE OF ACTION (WHETHER BASED IN CONTRACT, INFRINGEMENT, NEGLIGENCE, STRICT LIABILITY, OTHER TORT OR OTHERWISE), SHALL MANUFACTURER'S LIABILITY TO YOU EXCEED THE PRICE PAID BY THE ORIGINAL OWNER FOR THE INSINKERATOR PRODUCT.

The term "consequential damages" shall include, but not be limited to, loss of anticipated profits, business interruption, loss of use or revenue, cost of capital or loss or damage to property or equipment.

Some states do not allow the exclusion or limitation of incidental or consequential damages, so the above limitation may not apply to you. This warranty gives you specific legal rights and you may also have other rights which vary from state to state.

InSinkErator® may make improvements and changes in the specification at any time, in its sole discretion, without notice or obligation and further reserves the right to change or discontinue models. ©2026 InSinkErator®. All rights reserved.